© 2020TE Connectivity. All Rights Reserved.

REVISIONS					
P	LTR	DESCRIPTION	DATE	DWN	APVD
	A	INITIAL RELEASE	15SEP2020	L.C	D.Z
	B	REVISE PER ECN-22-133199	04JAN2022	L.C	D.Z

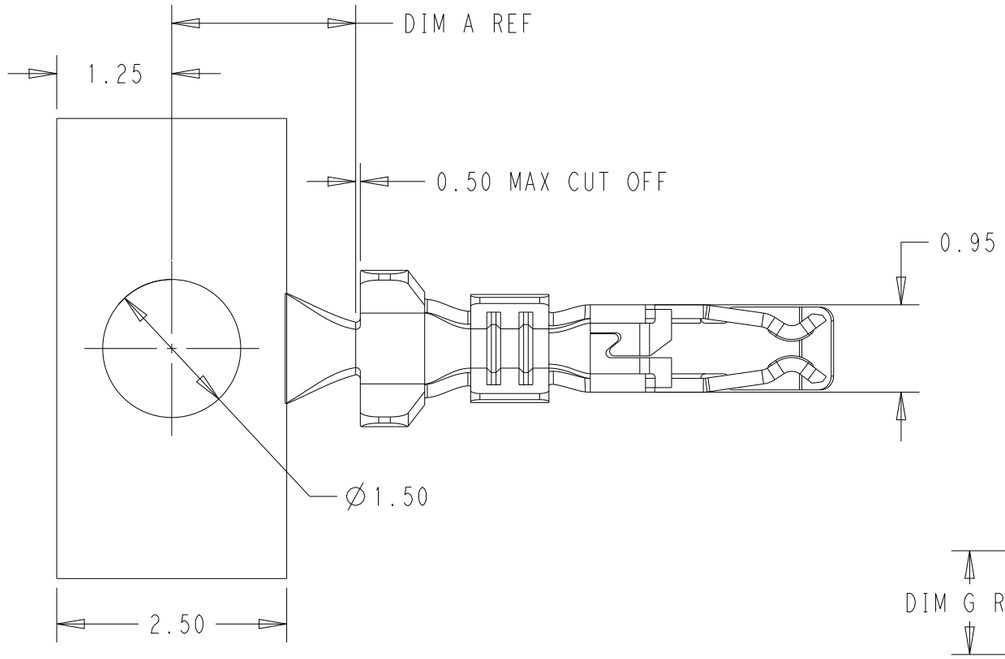

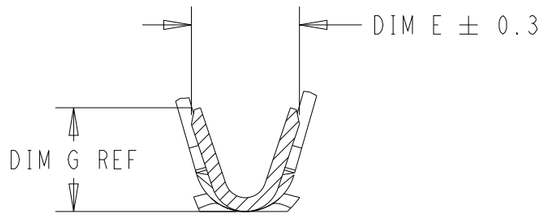

SECTION B-B

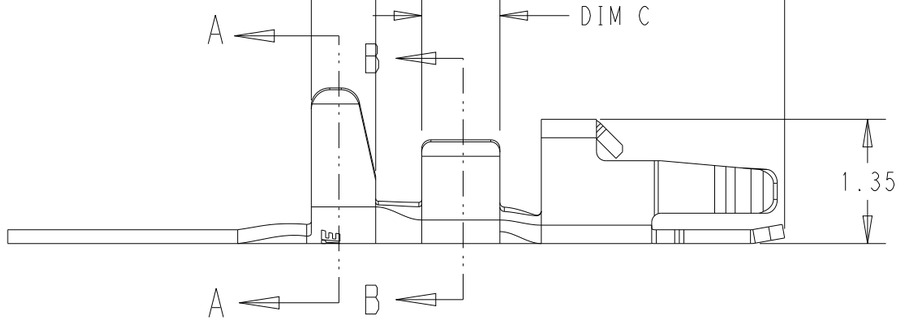

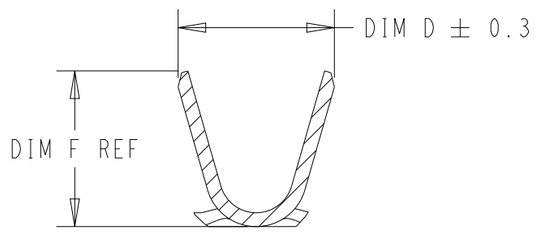

SECTION A-A

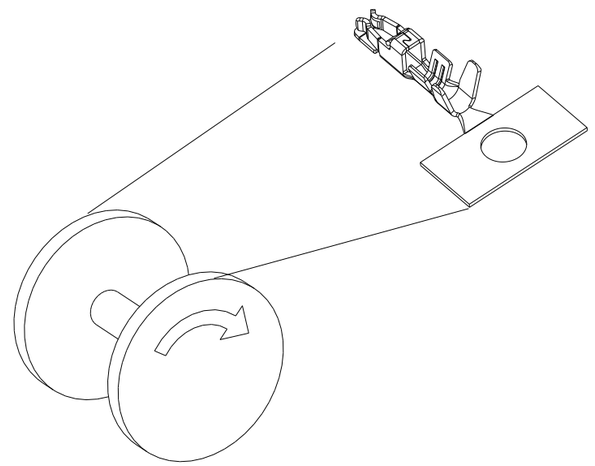

1. MATERIAL: COPPER ALLOY, 0.15 THICK
2. FINISH: 1 MICROMETER MIN. TIN PRE-PLATED
3. TE LOGO LOCATED APPROX IN THIS AREA
4. MATING PLUG HOUSING P/Ns
   2371403-1: X-2371404-X, X-2371671-X, X-2376950-X
   2371403-2: X-2382946-X
5. APPLICATION FEED 5.0 mm

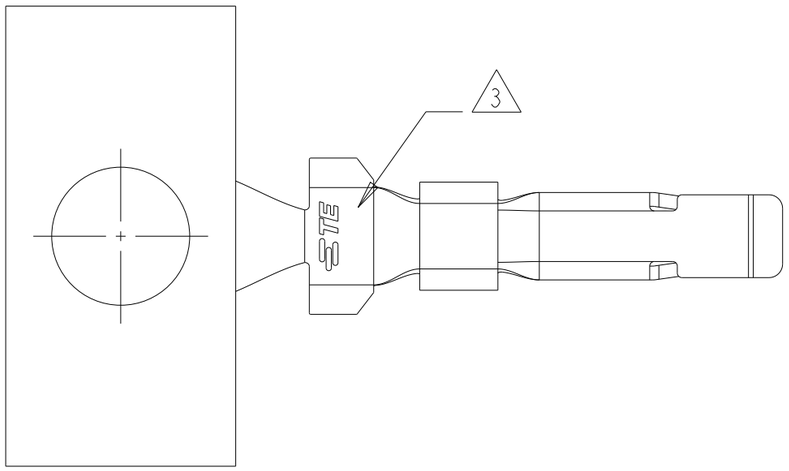

DIM G	DIM F	DIM E	DIM D	DIM C	DIM B	DIM A	INSULATION DIA	WIRE RANGE	REMARKS	FINISH	PART NO
1.4	2.1	1.46	1.96	1.05	5.64	1.55	Ø0.85-1.10	24-28 AWG	ON REEL	2	2371403-2
1.1	1.7	1.17	1.70	0.85	5.14	2.05	Ø0.76-1.00	26-30 AWG	ON REEL	2	2371403-1

THIS DRAWING IS A CONTROLLED DOCUMENT.

DIMENSIONS: mm

TOLERANCES UNLESS OTHERWISE SPECIFIED:
0 PLC ±-
1 PLC ±0.30
2 PLC ±0.15
3 PLC ±-
4 PLC ±-
ANGLES ±-

MATERIAL 1

FINISH - SEE TABLE

DWN LEO CHEN 20MAR2020
CHK DANIEL ZHANG 20MAR2020
APVD DANIEL ZHANG 20MAR2020
PRODUCT SPEC 108-106451
APPLICATION SPEC 114-106497
WEIGHT -

TE Connectivity

NAME RECEPTACLE TERMINAL SGI 1.25/1.50mm -

SIZE	CAGE CODE	DRAWING NO	RESTRICTED TO
A3	00779	C-2371403	-

CUSTOMER DRAWING | SCALE 15:1 | SHEET 1 OF 1 | REV B

1470-19 (3/13)