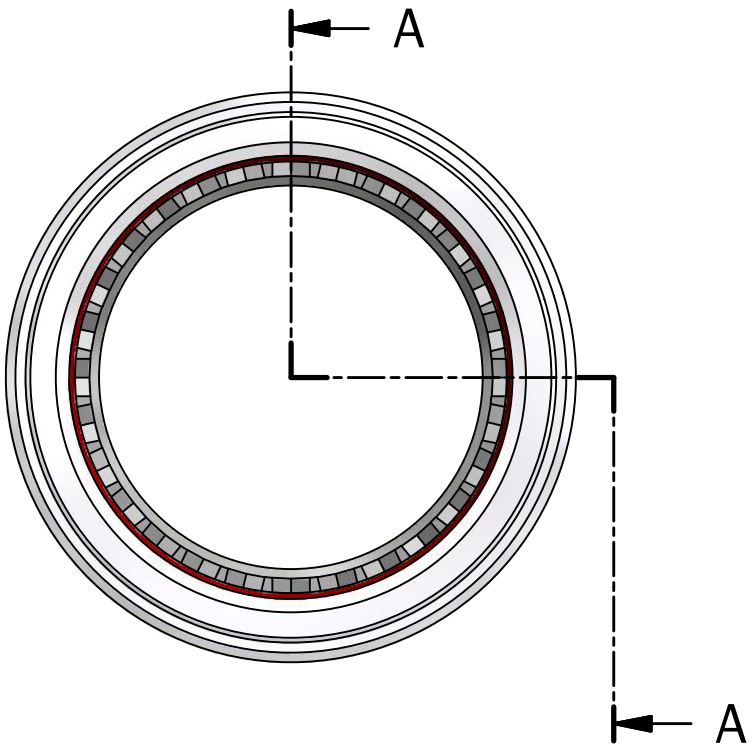

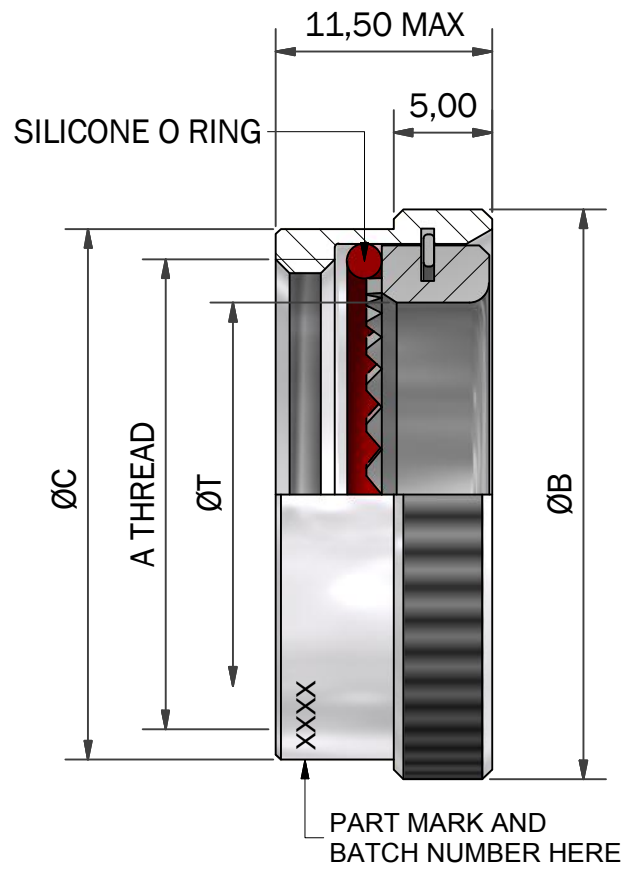

A-A

TABLE 1

DASH NO.	SHELL SIZE SERIES I	SHELL SIZE SERIES II	A THREAD	ØB MAX	C MAX	ØT MIN
08	09	08	7/16-28 UNEF	17,0	14,5	6,6
10	11	10	9/16-24 UNEF	20,0	18,0	10,1
12	13	12	11/16-24 UNEF	23,0	21,0	12,9
14	15	14	13/16-20 UNEF	26,2	24,0	16,1
16	17	16	15/16-20 UNEF	29,0	27,0	19,3
18	19	18	1 1/16-18 UNEF	32,0	30,5	21,7
20	21	20	1 3/16-18 UNEF	35,0	33,5	24,9
22	23	22	1 5/16-18 UNEF	38,0	36,5	28,1
24	25	24	1 7/16-18 UNEF	42,0	40,0	31,3

TABLE 2

CODE	MATERIAL / PLATING
1-C	ALUMINIUM / ELECTROLESS NICKEL
1-B	ALUMINIUM / CADMIUM OLIVE DRAB OVER ELECTROLESS NICKEL
1-ZB	ALUMINIUM / ZINC COBALT OLIVE DRAB OVER ELECTROLESS NICKEL
1-ZN	ALUMINIUM / ZINC NICKEL BLACK PASSIVATE OVER ELECTROLESS NICKEL
1-G	ALUMINIUM / BLACK ANODISE, SULPHURIC
4-J	STAINLESS STEEL / PASSIVATE
2-Z	NICKEL ALUMINIUM BRONZE / SHOT BLAST

SEE SS0076 FOR FULL RANGE OF FINISH OPTIONS

76F1-16-1-C

- SERIES
- CONNECTOR INTERFACE
- ANGLE
- SHELL SIZE (TABLE 1)
- MATERIAL (TABLE 2)
- FINISH (TABLE 2)

DRAWN	DATE
P.FRYER	08/11/2010
DESIGN APPROVAL	DATE
K.SHEPPARD	27/09/2013
DOC TYPE	Customer Drawing
ISSUE/REV AA	DCR ---
NCAGE CODE U5792	WEIGHT N/A

3RD ANGLE PROJECTION NOT TO SCALE

UNLESS OTHERWISE SPECIFIED ALL DIMENSIONS IN MILLIMETRES GENERAL TOL LINEAR +/-0,25MM ANGULAR +/- 1°

MATERIAL
SEE PART NUMBER BREAKDOWN

FINISH
SEE PART NUMBER BREAKDOWN

PART NUMBER: 76F SERIES

TITLE: LOW PROFILE SPIN COUPLING ADAPTOR TO TAKE A HEAT SHRINK BOOT

ASSY USED ON: MIL-DTL-38999 SERIES I & II

RESTRICTED TO:

THIS DRAWING IS COPYRIGHT AND THE PROPERTY OF POLAMCO LTD IT MUST NOT BE COPIED, USED FOR MANUFACTURE OR OTHERWISE DISCLOSED WITHOUT PRIOR WRITTEN CONSENT OF THE COMPANY.

POLAMCO LTD, WESTON LOCK, LOWER BRISTOL ROAD BATH BA2 1EP

SHT 1

DRAWING NO: P10075

Polamco

TE connectivity