THIS COPY IS PROVIDED ON A RESTRICTED BASIS AND IS NOT TO BE USED IN ANY WAY DETRIMENTAL TO THE INTERESTS OF PANDUIT CORP.

PANDUIT PART NO.	WEIGHT (APPOX.)
QAPP24BL	0.80 lb (362.9 g)
QAPP24WH	0.80 lb (362.9 g)

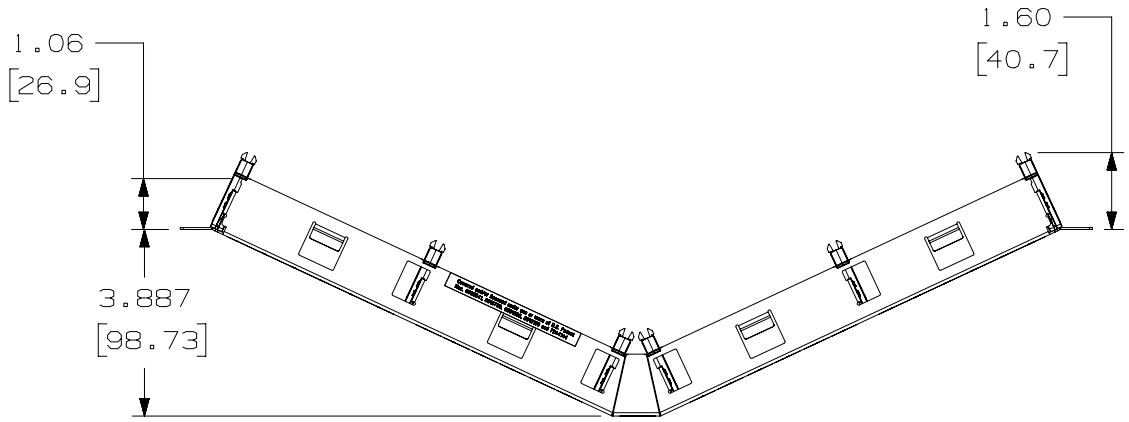

NOTES:
1. SEE CURRENT CATALOG FOR VARIOUS APPLICATIONS.
2. THE PATCH PANEL IS DESIGNED FOR MOUNTING TO 19" UNIVERSAL RACKS.
3. DIMENSIONS IN BRACKETS ARE IN METRIC.
4. PART INCLUDES:
   1- METAL STAMPING WITH SLIDE GUIDES
   1- SCREW KIT (INCLUDES FOUR #12-24 SCREWS)
   1- SCREW KIT (INCLUDES FOUR M6 SCREWS)
5. QAPP24BL IS BLACK WITH WHITE SILKSCREENING. QAPP24WH IS WHITE WITH BLACK SILKSCREENING.

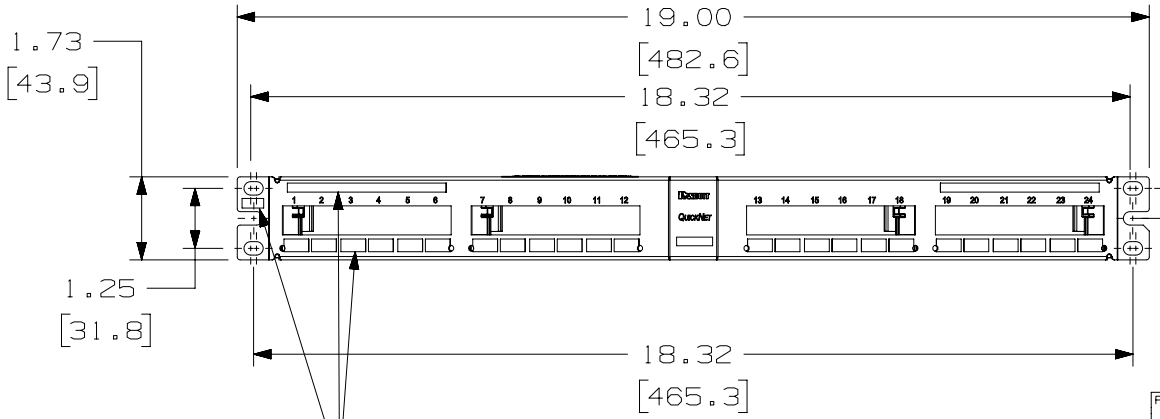

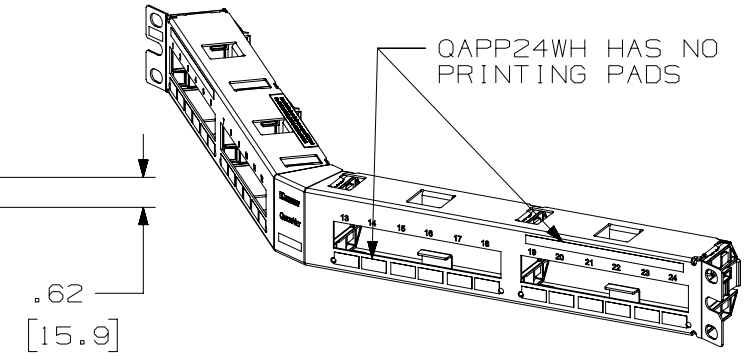

PART NUMBER: QAPP24BL; QAPP24WH

TITLE: QUICKNET 24 PORT ANGLED PATCH PANEL

CUSTOMER DRAWING

ITEM REVISION NAME: M02582BR/07

DATASET FILE NAME: M02582BR_DC19/07A

UNLESS OTHERWISE SPECIFIED, DIMENSIONAL TOLERANCES ARE: IN [mm]
.X ± .XXX ± .010 [.3]
.XX ± .03[.8] ANGLES ±
THIRD ANGLE PROJECTION

MATERIAL: PANEL: C.R.S. GUIDES: ABS

DRAWING NUMBER: 02582-19

DRAWN BY	DATE	CHK	SCALE	SHT 1 OF 1	SIZE
MDJr	9-01-06	WFMI	NONE		A

REV	DATE	BY	CHK	APR	DESCRIPTION	ECN
3	12/20/17	BAME	KRKE	RWB	ADDED P/N QAPP24WH	M09000HA
2	5/23/14	JSP	REFR	TMBA	REVISED AND REDRAWN, PREVIOUS REVISIONS HAVE BEEN OMITTED.	02582-19

D10100DA/14