Jul.1.2024 Copyright 2024 HIROSE ELECTRIC CO., LTD. All Rights Reserved.
In case of consideration for using Automotive equipment / device which demand high reliability, kindly contact our sales window correspondents.

	COUNT	DESCRIPTION OF REVISIONS	BY	CHKD	DATE		COUNT	DESCRIPTION OF REVISIONS	BY	CHKD	DATE
△					. .	△					. .
△					. .	△					. .
△					. .	△					. .

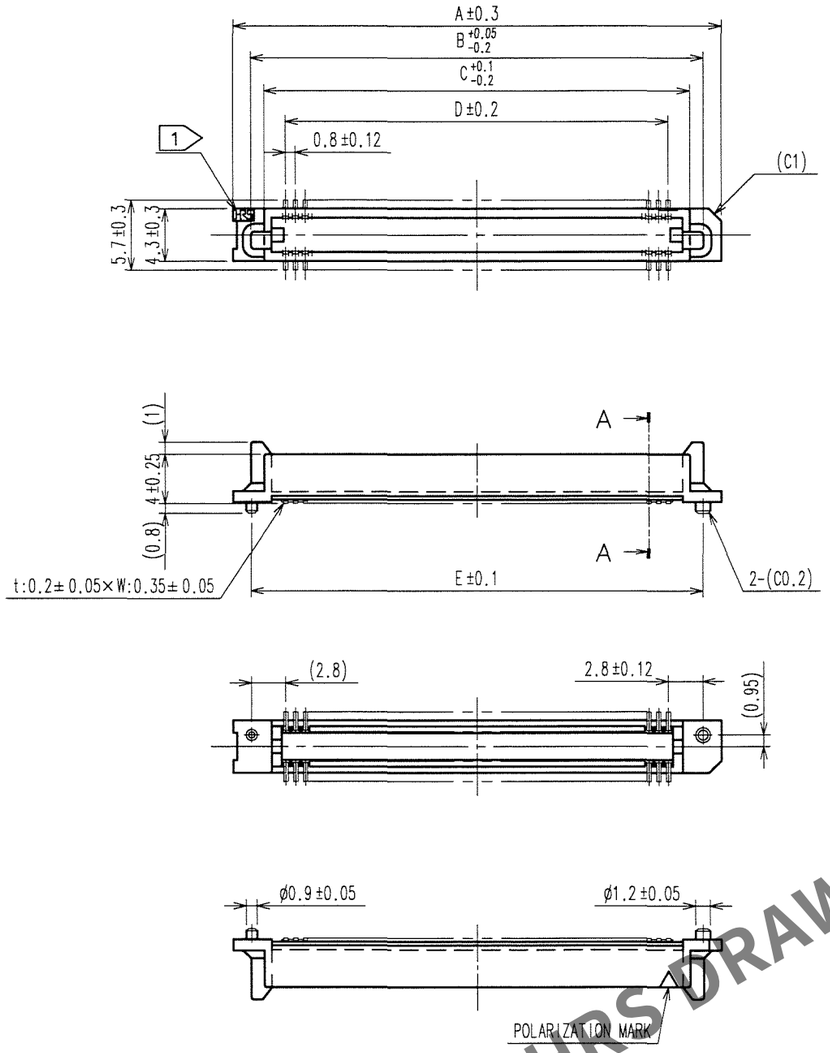

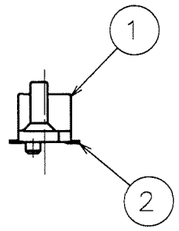

A-A(10:1)

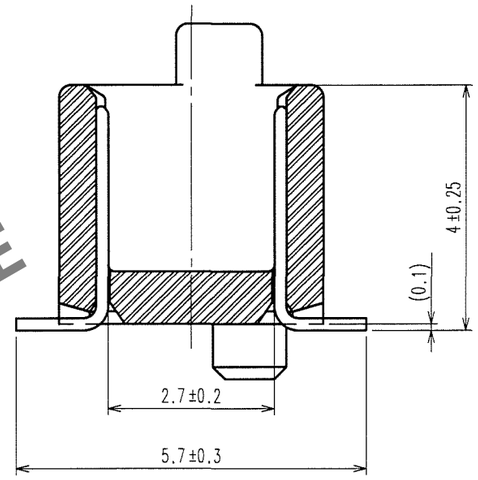

HRS DRAWING FOR REFERENCE

PART No.	CODE No.	5	A	B	C	D	E
FX6- 20P-0.8SV(71)	CL576-0001-3-71	20	15.8	12.9	10.7	7.2	12.8
FX6- 40P-0.8SV(71)	CL576-0003-9-71	40	23.8	20.9	18.7	15.2	20.8
FX6- 50P-0.8SV(71)	CL576-0004-1-71	50	27.8	24.9	22.7	19.2	24.8
FX6- 60P-0.8SV(71)	CL576-0005-4-71	60	31.8	28.9	26.7	23.2	28.8
FX6- 80P-0.8SV(71)	CL576-0007-0-71	80	39.8	36.9	34.7	31.2	36.8
FX6-100P-0.8SV(71)	CL576-0008-2-71	100	47.8	44.9	42.7	39.2	44.8

NOTE
1. HRS MARK SHALL BE OPTIONAL.
2. LEAD CO-PLANARITY SHALL BE 0.1mm MAX.
3. FOR MODIFICATION,ETC.,PREVENTIVE HOLE FOR SINK MARK MAY BE ADDED ACCORDING TO CIRCUMSTANCES.
4. THE DIMENSIONS IN PARENTHESES ARE FOR REFERENCE.
5. NUMBER OF CONTACTS.

RECOMMENDED LAND PATTERN DIMENSION OF PCB (MOUNTING SIDE)

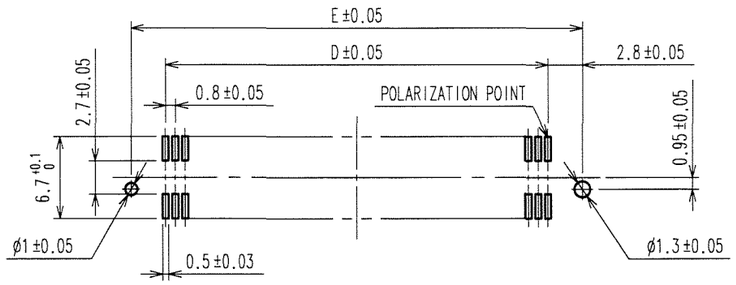

NO.	MATERIAL	FINISH, REMARKS	NO.	MATERIAL	FINISH, REMARKS
1	PPS	LIGHT BROWN (UL94V-0)	2	PHOSPHOR BRONZE	CONTACT AREA:GOLD 0.1μm min. LEAD AREA:GOLD FLASH UNDER PLATING:NICKEL 1μm min.

CODE NO.(OLD)	DRAWN	DESIGNED	CHECKED	APPROVED	RELEASED
	A.SUZUKAWA 06.05.23	H.Nakamura 06.05.24	K.Ogawa 06.05.24	H.Okawa 06.05.24	. .

SCALE FREE	DRAWING NO. EDC3-071174-25	PART NO. FX6-**P-0.8SV(71)
UNITS mm	HRS HIROSE ELECTRIC CO., LTD	CODE NO. CL576 — 1/1

TO
PCK