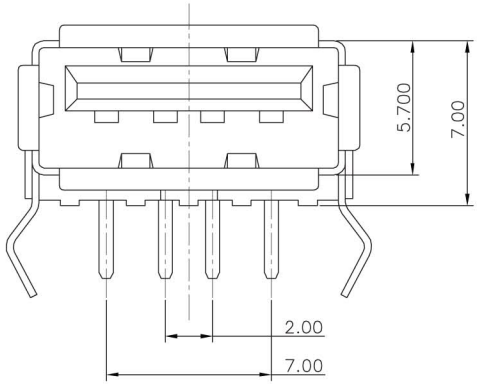

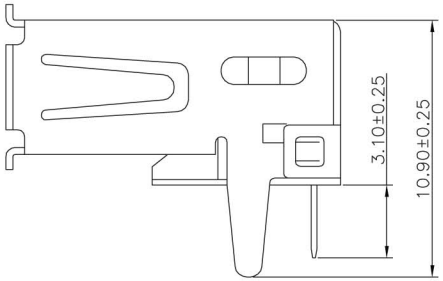

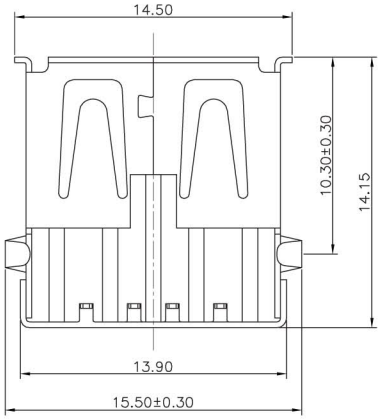

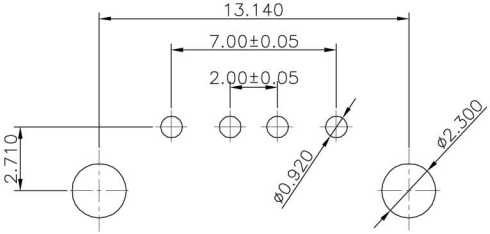

Recommended PCB Layout

Material:
- Housing: PBT+30% G.F. UL 94V-0
- Contact: Brass
- Shell: Brass

Plating:
- Contacts: Gold Flash & Tin over Nickel plated
- Shell: Nickel over all plating

Electrical:
- Current - Max(Amps): 1.5A
- Voltage - Max(Volts): 30V
- Withstanding voltage: 500V AC
- Contact Resistance: 30MΩ Max.
- Insulation Resistance: 1,000MΩ Min.

Environmental:
- Temperature: -55°C ~ +50°C
- Reflow Temperature: 223 C Max.

Unit: MM±0.15MM

Scale	1:1
TOLERANCE	
X.X	±0.40
X.XX	±0.25
X.XXX	±0.15
Angle	±3°

Modification	Date	Name

		Name
Drawn	10.19.11	Chappell
Approved		

Item No.
AU-Y1005-R

Title USB 1.1 Type A Connector - for PCB Mounting, 5μ" Gold, White Insulator

Drawing No. **rev00**

Replace | Sheet

RoHS Complaint

ASSMANN WSW components