THIS DRAWING IS UNPUBLISHED. RELEASED FOR PUBLICATION 20
© COPYRIGHT 20 BY - ALL RIGHTS RESERVED.

creo
Creo Parametric 2.0
DO NOT REVISE EXCEPT BY CAD

REVISIONS

P	LTR	DESCRIPTION	DATE	DWN	APVD
	P	REDRAW BY CAD ECO-14-013531	08SEP2014	NCL	LWP
	R	REVISED DRAWING ECO-14-019222	27APR2015	NCL	GOJ
	S	REVISED DRAWING ECO-18-014030	11SEP2018	NCL	JMN

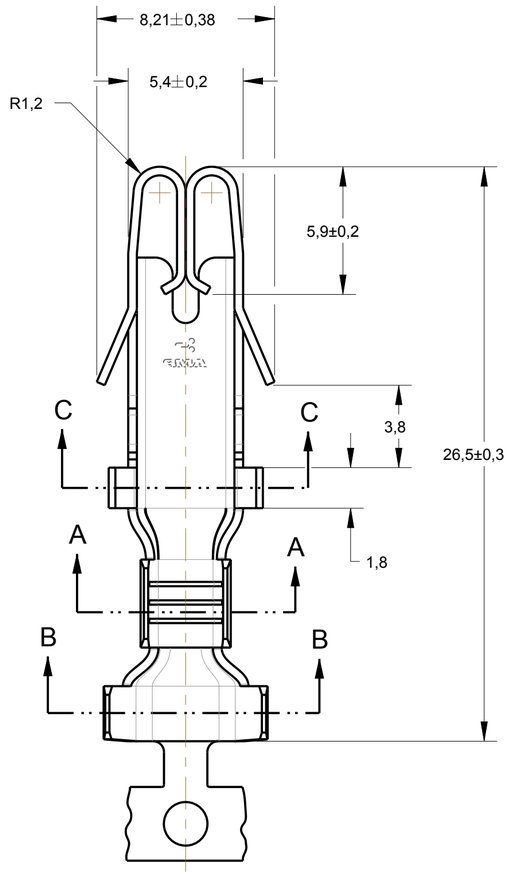

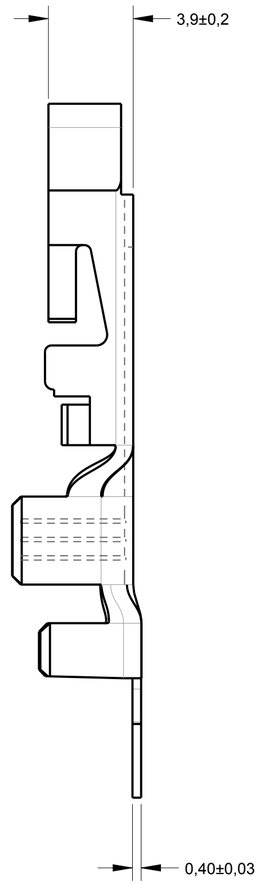

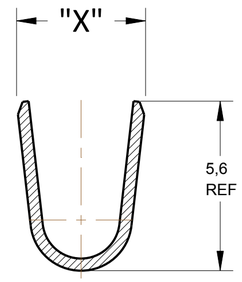

SECTION A-A
SCALE 7:1

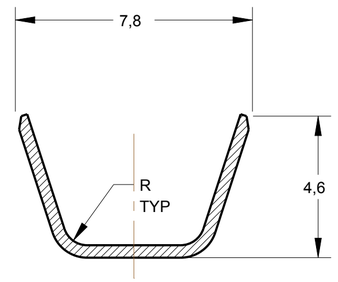

SECTION B-B
SCALE 7:1

1 - OBSOLETE PARTS: OBSOLETE CIS STREAMLINING PER D.RENAUD/D.SINISI

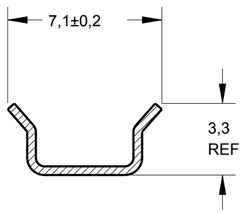

SECTION C-C

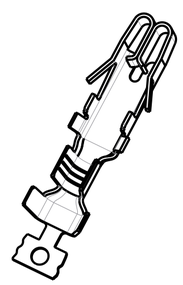

PERSPECTIVE VIEW
SCALE 2:1

	DIM."X"	FINISH	MATERIAL	PART NUMBER
	4,9	PRE-ESTANHADO / PRE TINNED	LATÃO / BRASS	880399-5
1 OBSOLETE	~~4,3~~	~~ESTANHADO / TINNED~~	~~COBRE FERRO~~	~~880399-4~~
1 OBSOLETE	~~4,3~~	~~—~~	~~COBRE FERRO~~	~~880399-3~~
	4,2±0,2	PRE-ESTANHADO / PRE TINNED	LATÃO / BRASS	880399-2
	4,2±0,2	—	LATÃO / BRASS	880399-1

THIS DRAWING IS A CONTROLLED DOCUMENT.

DIMENSIONS: mm

TOLERANCES UNLESS OTHERWISE SPECIFIED:
0 PLC ±-
1 PLC ±0,5
2 PLC ±-
3 PLC ±-
4 PLC ±-
ANGLES ±1°

WIRE RANGE >2,5-5,0mm²
INSUL.RANGE ∅ 3,3-5,0mm

MATERIAL SEE TABLE -
FINISH SEE TABLE -

DWN 08SEP2014 NCLAPRESA
CHK 08SEP2014 FCHRISTIANO
APVD 08SEP2014 LWPRADO

PRODUCT SPEC -
APPLICATION SPEC -
WEIGHT -

TE Connectivity

NAME - FUSE CONTACT -

SIZE A2 | CAGE CODE 00779 | DRAWING NO C-880399 | RESTRICTED TO -

Customer Drawing | SCALE 3:1 | SHEET 1 OF 1 | REV S

1471-9 (3/13)