Mar.1.2020 Copyright 2020 HIROSE ELECTRIC CO., LTD. All Rights Reserved.
In case of consideration for using Automotive equipment / device which demand high reliability, kindly contact our sales window correspondents.

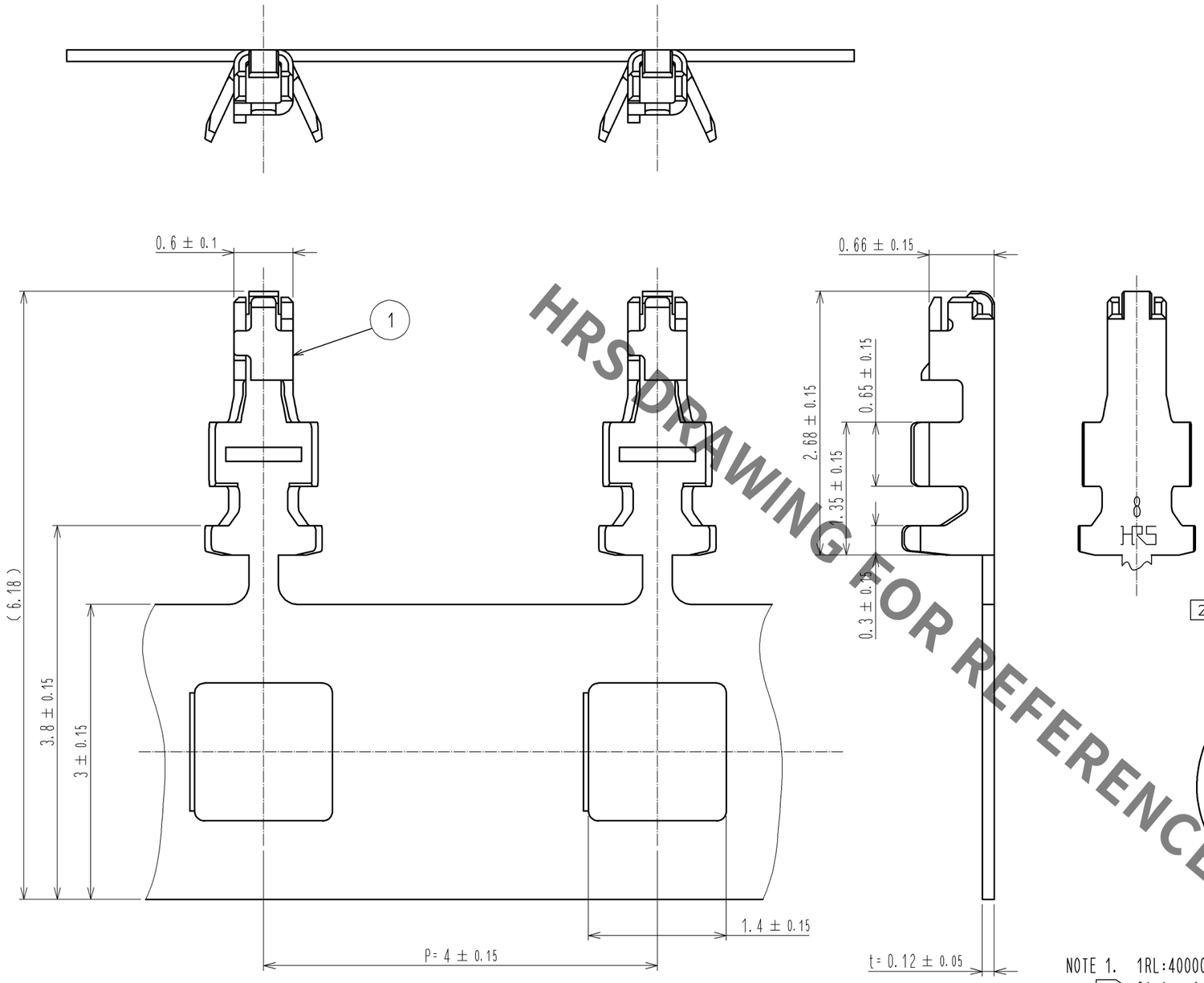

HRS DRAWING FOR REFERENCE

2 Style and dimension of box

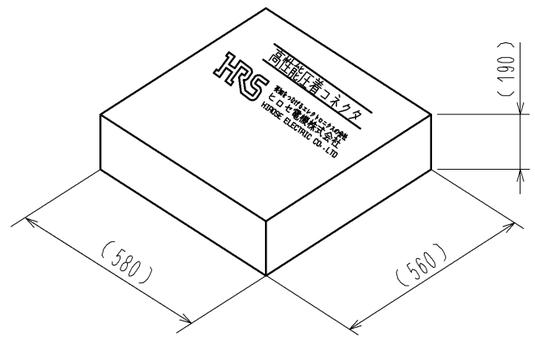

2 Style and dimension of reel

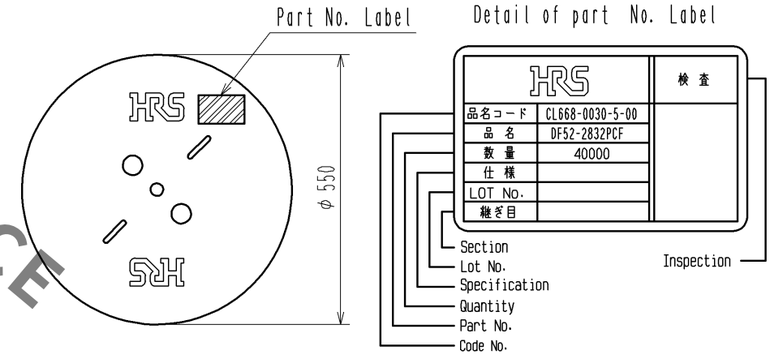

NOTE 1. 1RL:40000 contacts.
2 Style of reel and box shows in figure.
3. A maximum of 5 reels are packed up in one box.
4. Please be sure to check the form of crimping using a cable. when you adjust applicator.

NO.	MATERIAL	FINISH , REMARKS
1	Copper alloy	Surface:Tin plating 1μm MIN

UNITS	SCALE	COUNT	DESCRIPTION OF REVISIONS	DESIGNED	CHECKED	DATE
mm	20 : 1					

HRS HIROSE ELECTRIC CO., LTD.

APPROVED	: KI. AKIYAMA	14.11.18	DRAWING NO.	EDC3-361289-00
CHECKED	: HK. UMEHARA	14.11.18	PART NO.	DF52-2832PCF
DESIGNED	: TH. YOSHIZAWA	14.11.18	CODE NO.	CL668-0030-5-00
DRAWN	: TH. YOSHIZAWA	14.11.18		1/1

FORM HC0011-5-7