TOP VIEW

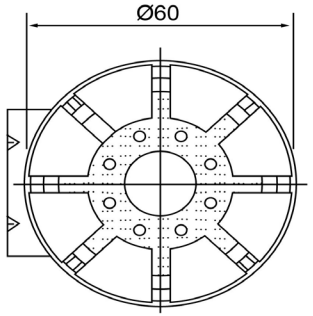

SIDE VIEW

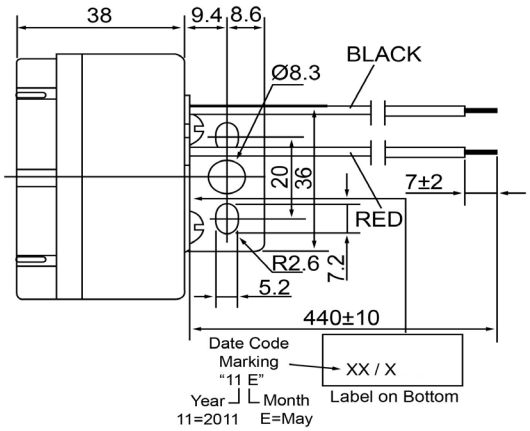

Specifications		
Description	**Value**	**Unit**
Technology	Piezo	
Resonant Frequency	2,800	(Hz)
Rated Voltage	12	(V)
SPL @ 10cm	120	(dBA)
Tone	Single	
Mount Type	Flange	
Voltage Range	6 ~ 15	(V)
Max Rated Current	300	(mA)
Housing Material	ABS	
Operating Temperature	-20 ~ +70	°C
Storage Temperature	-20 ~ +70	°C
Weight	110	(g)

Notes

1) All dimensions are in mm unless otherwise noted
2) All parts meet RoHS

DB UNLIMITED

Revision History

Version	Description	Date	Approved
1	Released from Engineering	10/21/2013	J.S

Drawn by	Date	Checked by	Date	Approved by	Date
A.B.	10/21/2013	C.E.	10/21/2013	J.S	10/21/2013

Piezo Indicator

IP602812-1

sales@dbunlimitedco.com | www.dbunlimitedco.com
©2013, DB Unlimited

Downloaded from Arrow.com.