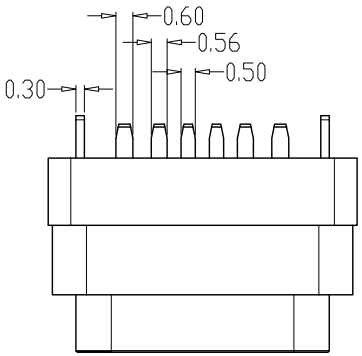

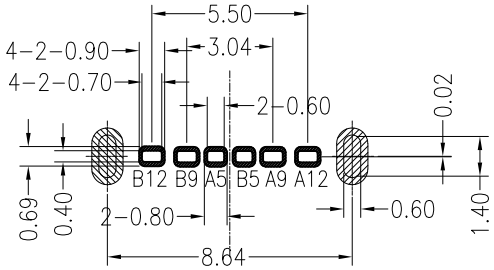

TOLERANCE UNSPECIFIED ±0.05mm

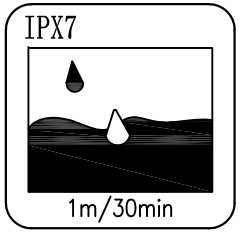

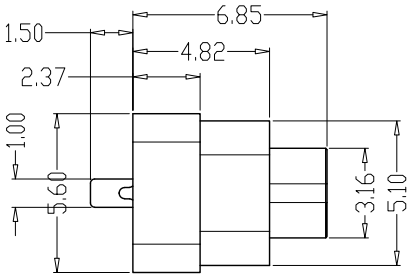

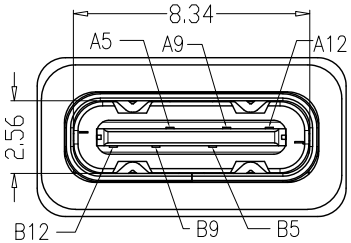

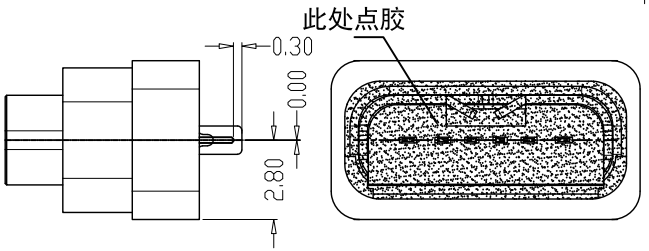

NOTES:

SPECIFICATION:

1. CURRENT RATING: 3.0A MAX
2. VOLTAGE: 100 VAC
3. TEMPERATURE RANGE: -30 °C ~ 85 °C
4. CONTACT RESISTANCE: 40 MILLIONHM MAX
5. INSULATION RESISTANCE: 100 MEGOHMS MIN.
6. LNSERTION FORCE : 5N~20N
7. UNMATING FORCE: 8N~20N
8. DURABILITY: 10,000 CYCLES
9. WATER PROOFNESS:THISPRODUCTIS BASED ON IPX7.

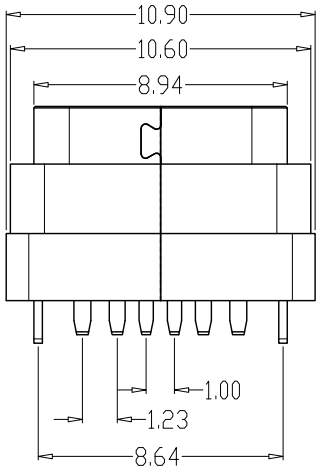

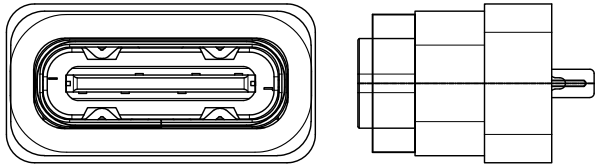

加防水圈示意图

NO.	DESCRIPTION	MATERIAL	REMARKS	QTY
5	防水圈	硅胶	BLACK	1PCS
4	SHELL	STAINLESS STEEL	NI/Cu Plated	1PCS
3	SHELL	PA9T	UL 94V-0 BLACK	1PCS
2	CONTACT	BRASS	Au Plated	1SET
1	MD	HIGH TEMPERATURE PLASTIC	BLACK	1PCS

PIN	SIGNAL NAME
B12	GND
B9	VBUS
B5	CC2
A5	CC1
A9	VBUS
A12	GND

Pb Process Capable

RoHS Compliant 2002/95/EC

HALOGEN Compliant Halogen Free

品赞科技 G-Switch ®

G-Switch Electronic (HongKong) CO.,Ltd.

Unless otherwise specified, Tolerance:

X.	±0.30
X.x	±0.20
X.xx	±0.15
X.xxx	±0.10
Angles	±3°

DESIGN Bright Lee	DATE 2016.05.29	Molde code:	
CHECKED	DATE	GT-USB-7076A	
APPROVED	DATE		
http://www.dg-switch.com		REV.: X1	SCALE: 4:1	UNIT: mm
TEL:0769-82388879		SIZE: A4	SHEET: 1/1	