REV.	ECN NO.	DATE	SIGN	DESCRIPTION
B	LEN1350061	2013/04/24	Ruru	Modify Cable OD Max
C	LEN14B0043	2014/10/31	Sam	Change Logo.
D	LE31810050	2018-01-16	Lingpeng	Change The Material Of Component

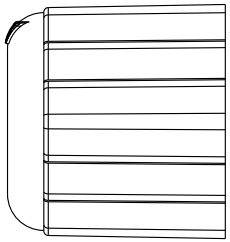

③ Seals Nut

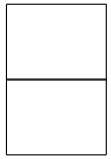

④ Seals

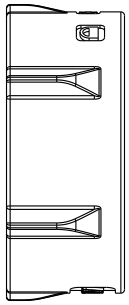

② Bayonet Nut

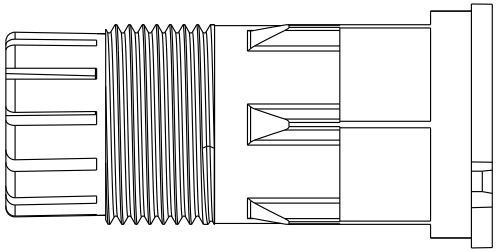

① Clamp Ring

⑤ Gasket

ALTW DCC. DEPT. CONFIDENTIAL 2018.01.17 ISSUED

ALTW CONFIDENTIAL 2018-01-16 R&D DEPT.

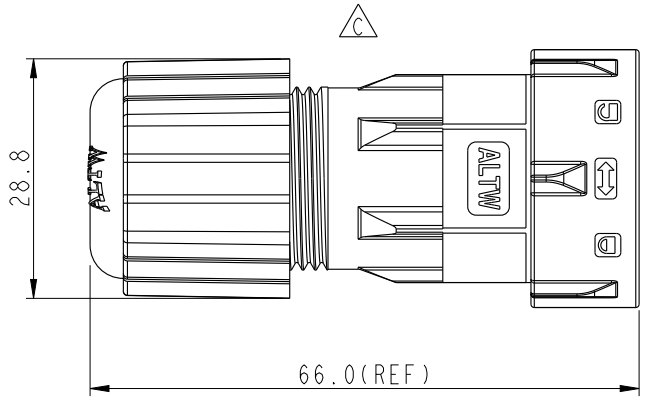

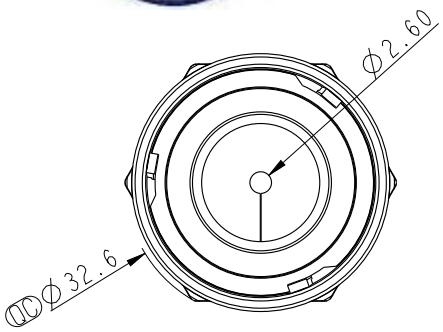

Note: D B

* QC Important Dimension.
* Waterproof Rating: IP67
* Cable OD: Ø2.0~Ø2.4mm Max.
* Clamp Ring: Nylon,UL94V-0,Black.
* Bayonet Nut: Nylon+GF,UL94V-0,Black.
* Sealing Nut: Nylon+GF,UL94V-0,Black.
* Seals: Silicone,UL94V-0,Gray.
* Gasket: Silicone,UL94V-0,Gray.
* ① ② ③ ④ ⑤ 組裝放入一個PE袋
  ③ 只需鎖3~4牙

(Assembly Put In One PE Bag)

UNIT: mm

TOLERANCE
.X ±0.25
.XX ±0.1
.XXX ±0.05
ANGLES ±1°

TITLE: FIBER OPTICAL CABLE ASS'Y FOR SC TYPE			
SCALE: 6:5	SIZE: A4	SHEET 1 OF 1	
REV.: D	WC-REV.: B.3	QC: Inspection item	

Amphenol LTW
安費諾亮泰企業股份有限公司

ITEM NO: FB-00BSMA-TL7001	DRAWN BY: Lingpeng	DATE: 2018-01-16
DWG NO: FB-00BSMA-TL7001	CHECKED BY: Mafei	DATE: 2018-01-16
CUSTOMER: ALTW	APPROVED BY: Jerry	DATE: 2018-01-16

THIS DOCUMENT IS SUBJECT TO CHANGE WITHOUT NOTICE. IT IS CONFIDENTIAL AND A PROPERTY OF Amphenol LTW. DISCLOSURE TO THIRD PARTY HAS TO BE AUTHORIZED BY Amphenol LTW.